PRODUCT SHEET

Description:
Stop Bracket Right When Seated, SS304, W/2 ø6,1mm Holes

Item number:
04.04.922-2

Units	Box	Carton	HS Code	Barcode
Pcs.	1	125	8302420090	5704866510523

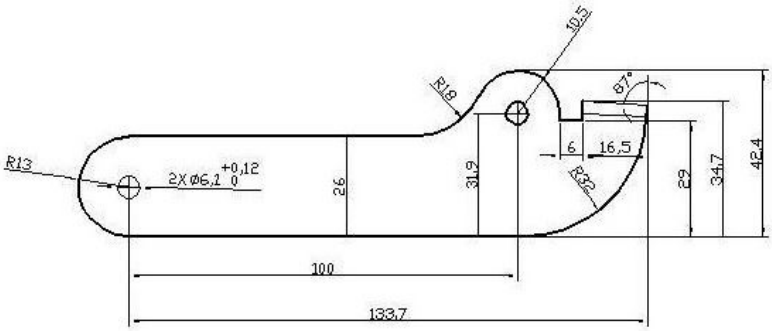

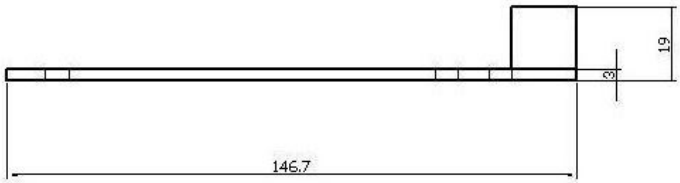

SISO A/S
Mileparken 11
DK-2740 Skovlunde
Denmark
VAT: DK 24786013

Phone +45 45 830 900

www.siso.dk
siso@siso.dk

Danske Bank
Nytorv Branch
Copenhagen
SWIFT: DABADKKK

Account no.
4180 3112 112936
IBAN Account
DK7230003112112936